PUBLISHED: 19-JAN-2017
2017.0 DISCOVERY (LR), 307-01

AUTOMATIC TRANSMISSION/TRANSAXLE - VEHICLES WITH: 8HP45 8-SPEED AUTOMATIC TRANSMISSION AWD

INPUT SHAFT SEAL (G1980271)

REMOVAL AND INSTALLATION

44.20.17	OIL SEAL - INPUT SHAFT - RENEW	3000 CC, AJ V6 (AJ126)	6.5	USED WITHINS	

SPECIAL TOOL(S)



100-012

Slide Hammer

transmissionmanuals.com

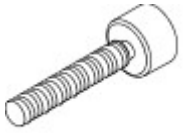

100-012-01

100-012-01

Slide Hammer Adapter



E84067

307-613

Holding Pins, Torque Converter

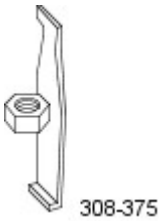

308-375

308-375

Remover, Input and Output Seal

transmissionmanuals.com



JLR-308-845

Installer, Input Shaft Seal

PART(S)

STEP	PART NAME	QUANTITY
Installation Step 1	Input shaft seal	1

REMOVAL

NOTE:

Some variation in the illustrations may occur, but the essential information is always correct.

1. Remove the transmission.
   Refer to: Transmission - V6 S/C 3.0L Petrol (307-01 Automatic Transmission /Transaxle - Vehicles With: 8HP45 8-Speed Automatic Transmission AWD, Removal).

transmissionmanuals.com

2.

CAUTION:

Be prepared to collect escaping fluids.

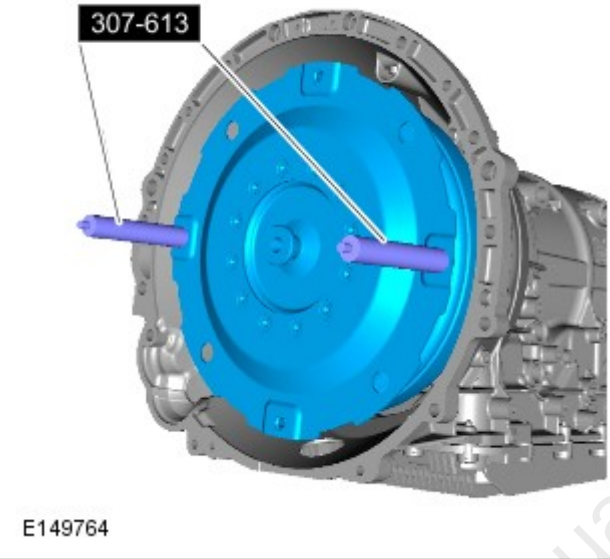

Special Tool(s): 307-613

3.

CAUTION:

Care must be taken to avoid damage to the seal register and running surface.

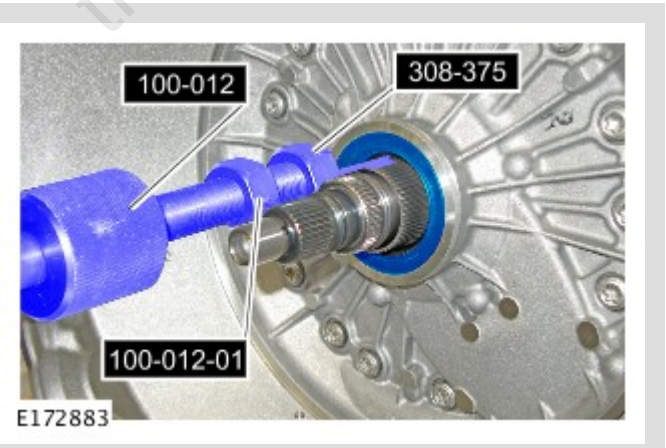

Discard the seal.

Special Tool(s): 100-012 , 100-012-01 , 308-375

transmissionmanuals.com

INSTALLATION

1.

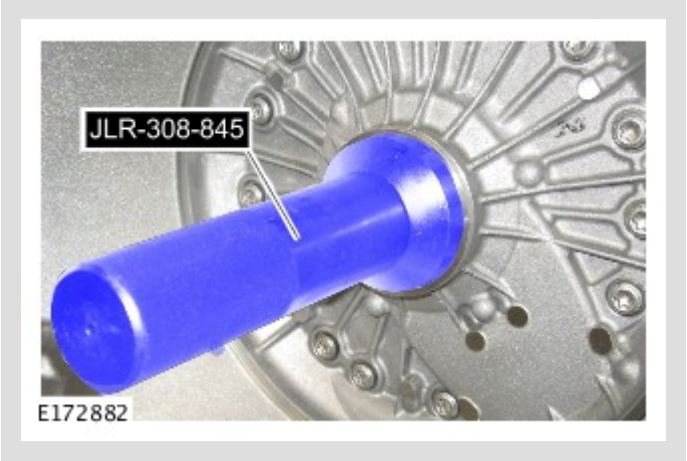

Install a new seal.

Special Tool(s): JLR-308-845

Renew Part: Input shaft seal Quantity: 1 .

transmissionmanuals.com

2.

CAUTION:

Make sure the torque converter is fully located into the oil pump drive.

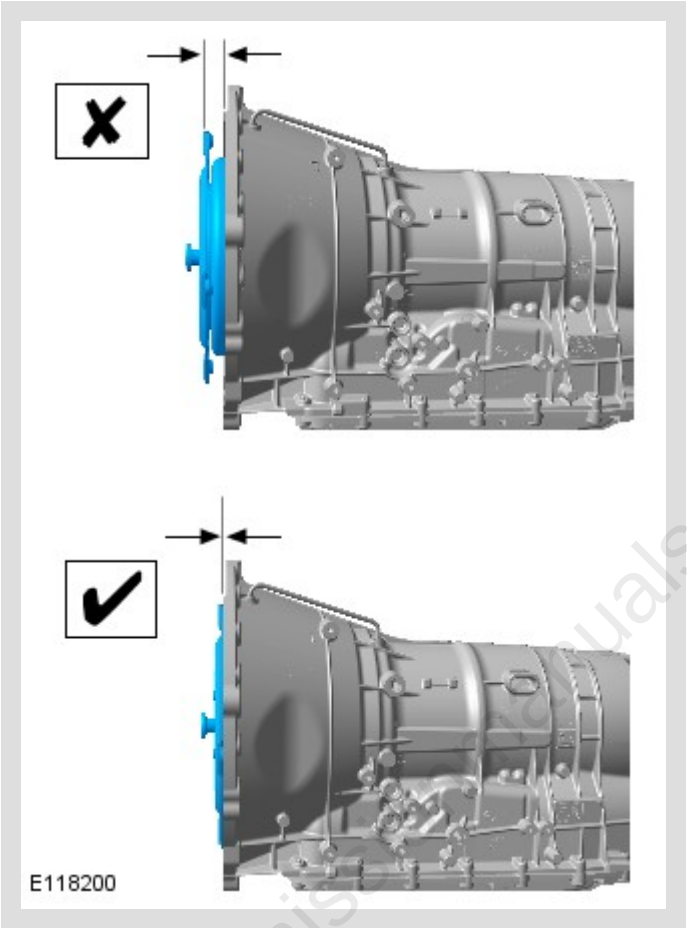

transmissionmanuals.com

3. Install the transmission.
Refer to: Transmission - V6 S/C 3.0L Petrol (307-01 Automatic Transmission /Transaxle - Vehicles With: 8HP45 8-Speed Automatic Transmission AWD, Installation).

4.

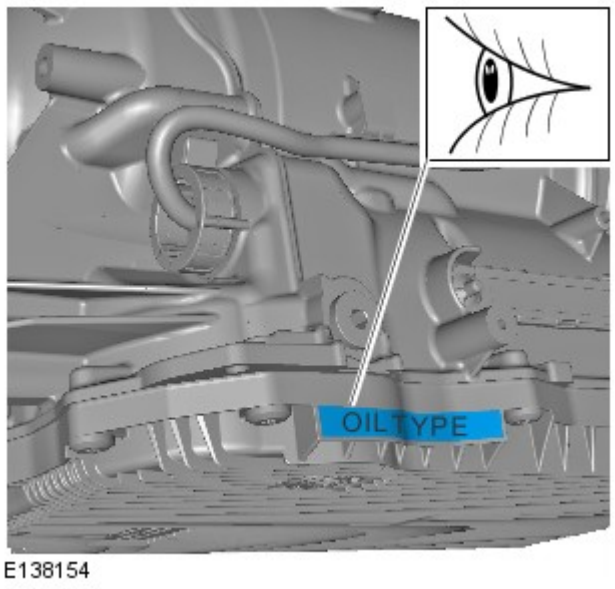

Carry out the transmission fluid level check.
Refer to: Transmission Fluid Level Check - V6 S/C 3.0L Petrol (307-01 Automatic Transmission/Transaxle - Vehicles With: 8HP45 8-Speed Automatic Transmission AWD, General Procedures).

transmissionmanuals.com